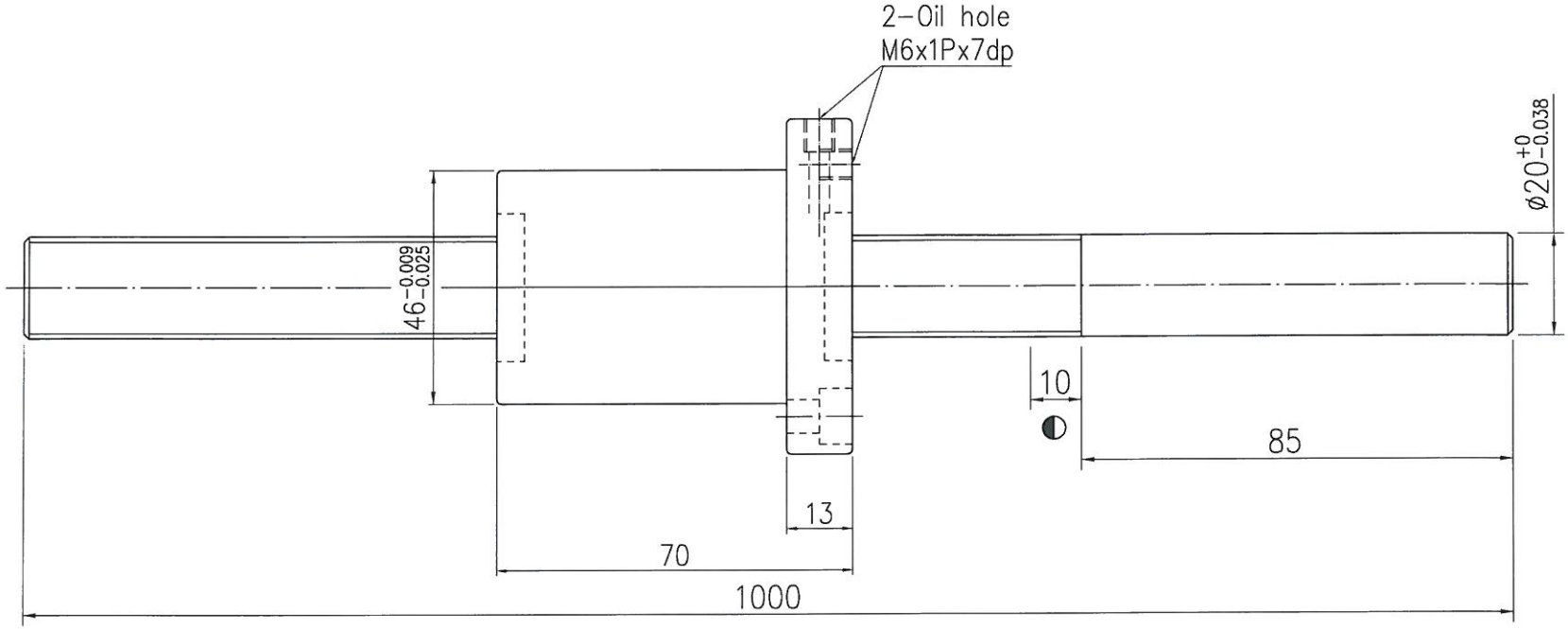

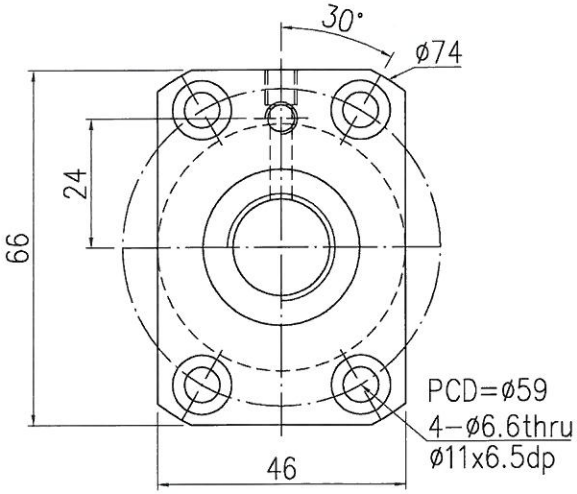

註： 螺桿全長公差 $^{+0}_{-0.038}$

Ball Nut Dwg NO	PFAR2010T3DV00

TOLERANCES FOR REGULAR DIMESIONS (MM)				SURFACE ROUGHNESS Ra(μ m)	
RANGE	TOLERANCE	RANGE	TOLERANCE		
0.5-6	±0.1	401-1000	±0.8	FINE FINISH	6.3a
7-30	±0.2	1001-2000	±1.2		
31-120	±0.3	2001-4000	±2.0	GRIND FINISH	1.6a
121-400	±0.5	4001 OVER	±3.0		

Accessory	QTY	Accessory	QTY
循環器	3	刮刷器	2
六角彈簧	2		

CUSTOMER: POWER

SPEC=R20-10T3-1-PFAD-915-1000-0.05-W-P1

(註：未標之倒角皆為C1)
Note: Chamferings are C1 if not specified otherwise

NOT EFFECTIVE HARDENED AREA
(不在有效熱處理範圍內)

DRAW	張家豪
CHECK	翁豐藝
APPROVE	鄭光田
DATE	102-06-13

GTEN BALL SCREW TECHNOLOGY

DWG NO.	CUSTOMER'S DWG. NO.	SCALE
13A2423	ISSOKU	1:X

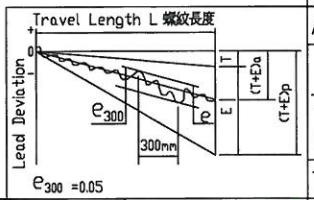

BASIC RATED DYNAMIC LOAD (kgf)		1621
BASIC RATED STATIC LOAD(kgf)		1925
THREAD DIR. /NO. OF START THD		RIGHT/ 1
BCD (mm)		ø21.034
LEAD (mm)		10
BALL DIA.(mm)		ø3.969
ROOT DIA.		ø25.003
EFFECTIVE TURNS (CIRCUITxROW)		1X3
LEAD ANGLE		8.61°
AXIAL PLAY		
DRAG TORQUE (kgf-cm)	CENTER	0
	RANGE	0
	SPRING FORCE (kgf)	0
THREAD PROFILE		GOTHIC

MATERIAL 材 質	SCREW	Rolled S55C_Ground 50CrMo4
	NUT	SCM415H
HARDNESS 熱處理	SCREW	滾珠牙部 HRC58°-62°
	NUT	滲碳熱處理 HRC58°-62°