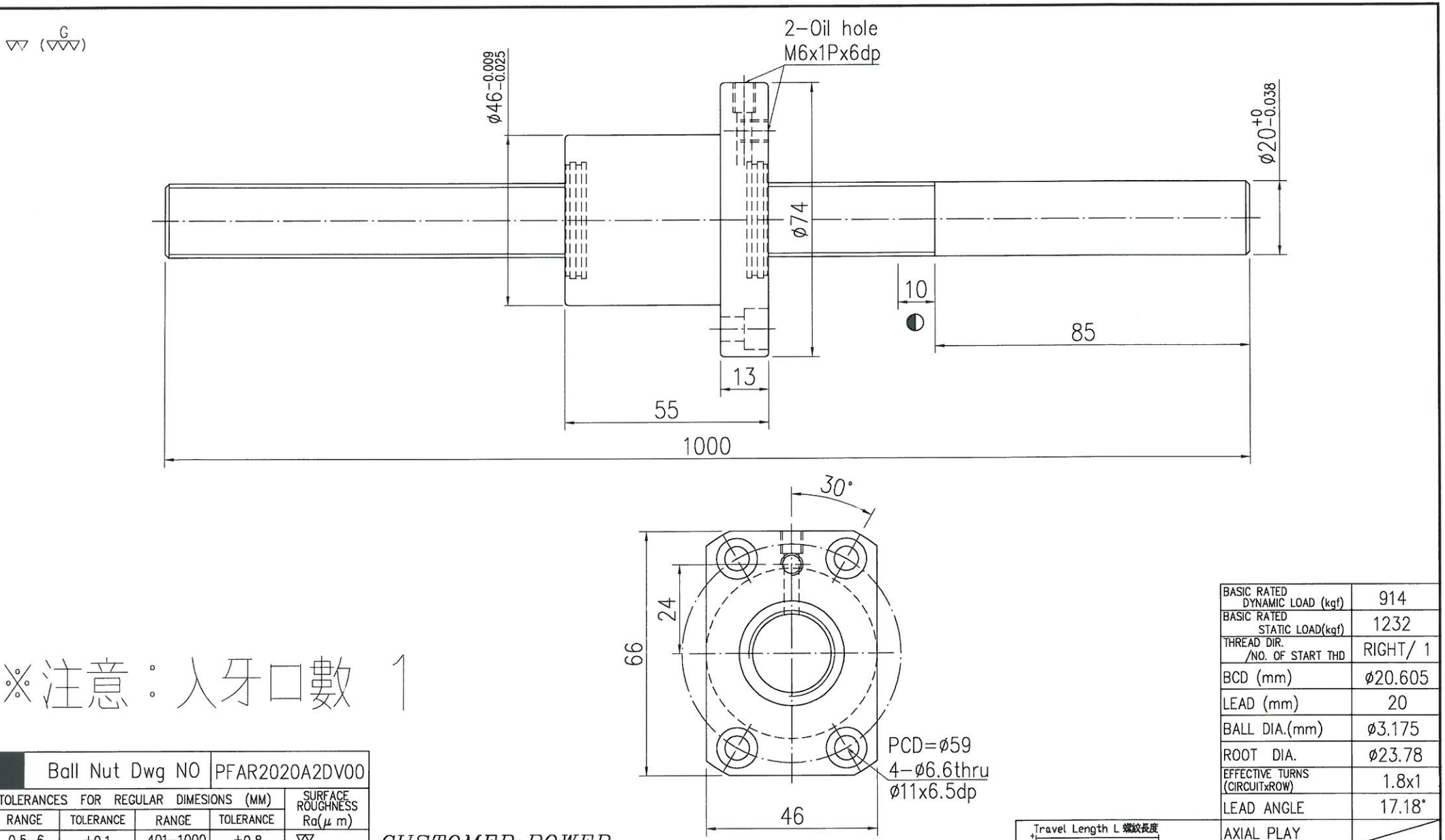

※注意：入牙口數 1

Ball Nut Dwg NO	PFAR2020A2DV00

TOLERANCES FOR REGULAR DIMESIONS (MM)				SURFACE ROUGHNESS Ra(μ m)
RANGE	TOLERANCE	RANGE	TOLERANCE	
0.5-6	±0.1	401-1000	±0.8	FINE FINISH 6.3a
7-30	±0.2	1001-2000	±1.2	
31-120	±0.3	2001-4000	±2.0	GRIND FINISH 1.6a
121-400	±0.5	4001 OVER	±3.0	

CUSTOMER: POWER

SPEC=R20-20A2-1-PFAD-1415-1500-0.05-W-P1

(註：未標之倒角皆為C1)
Note: Chamferings are C1 if not specified otherwise

NOT EFFECTIVE HARDENED AREA
(不在有效熱處理範圍內)

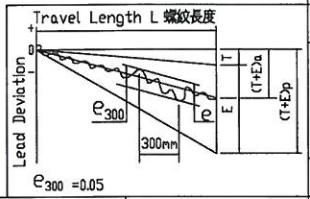

BASIC RATED DYNAMIC LOAD (kgf)		914
BASIC RATED STATIC LOAD(kgf)		1232
THREAD DIR. /NO. OF START THD		RIGHT/ 1
BCD (mm)		ø20.605
LEAD (mm)		20
BALL DIA.(mm)		ø3.175
ROOT DIA.		ø23.78
EFFECTIVE TURNS (CIRCUITxROW)		1.8x1
LEAD ANGLE		17.18°
AXIAL PLAY		
DRAG TORQUE (kgf-cm)	CENTER	0
	RANGE	0
	SPRING FORCE (kgf)	0
THREAD PROFILE		GOTHIC
MATERIAL 材質	SCREW	Rolled S55C_Ground 50CrMo4
	NUT	SCM415H
HARDNESS 熱處理	SCREW	滾珠牙部 HRC58°-62°
	NUT	滲碳熱處理 HRC58°-62°

Accessory	QTY	Accessory	QTY
循環器	2		
刮刷器	2		
C扣	2		

DRAW	張家豪
CHECK	翁豐藝
APPROVE	田示鵬
DATE	102-06-13

GTEN BALL SCREW TECHNOLOGY

DWG NO.	CUSTOMER'S DWG. NO.	SCALE
13A2427	ISSOKU	1:X